TRIPLE GOURD

CR32X
Accent Table Lamp

1-150W Max.
Bulb Type: A
Switch: 3-Way
Ash Glazed Ceramic
Antique Silver Finished Accents
Pearl Dupioni Fabric Shade

See Triple Gourd Table for Color / Base / Shade Options
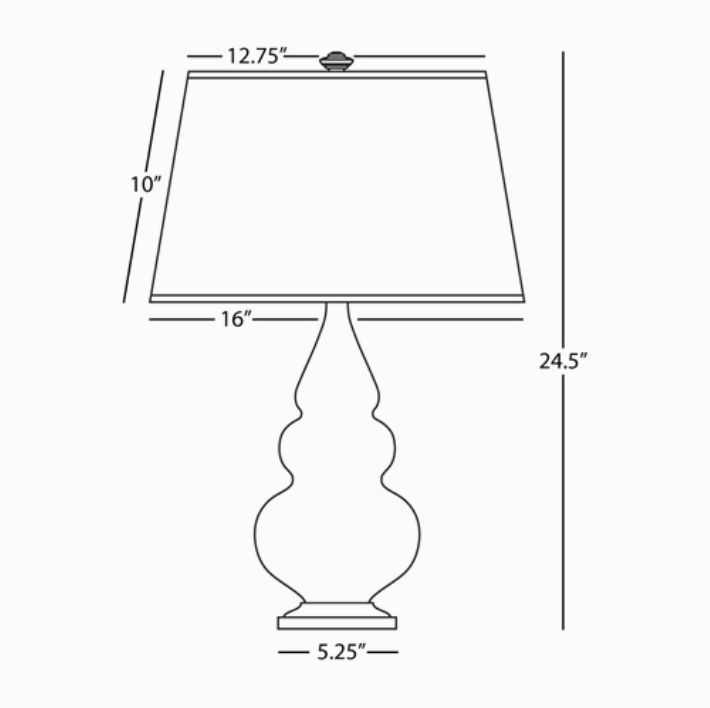
** Made In The USA*